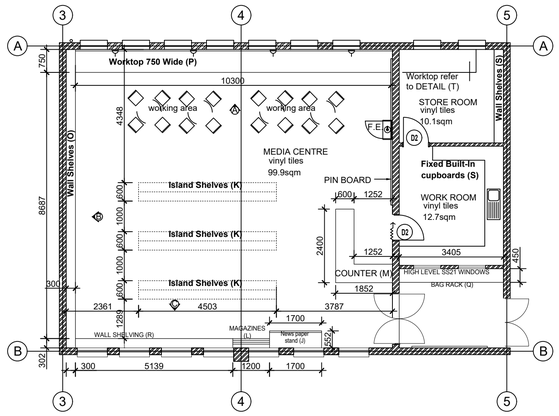

DETAIL NO:	SCALE:	DETAIL DESCRIPTION:	SEE DETAIL NUMBER:
	1/100	DETAIL PLAN OF MEDIA / LIBRARY	

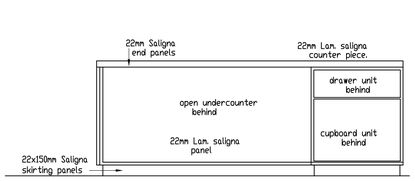

D/M: Elevation B scale 1:20

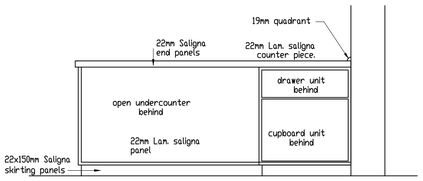

D/M: Elevation A scale 1:20

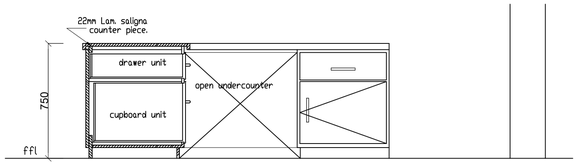

D/M: Section 1 scale 1:20

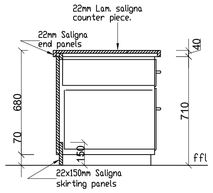

D/M: Section 2 scale 1:20

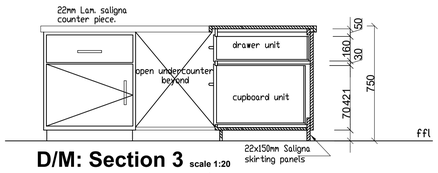

D/M: Section 3 scale 1:20

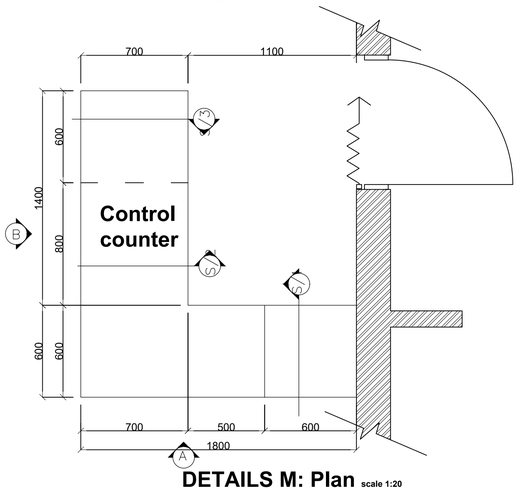

DETAILS M: Plan scale 1:20

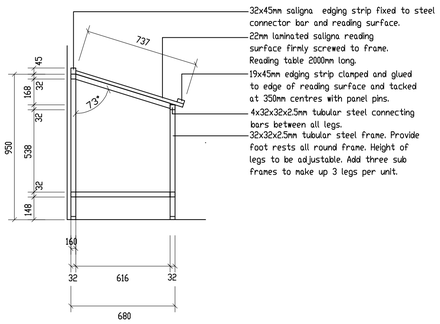

DETAIL NO:	SCALE:	DETAIL DESCRIPTION
DETAIL J	1/20	DETAIL SECTION OF READING TABLE

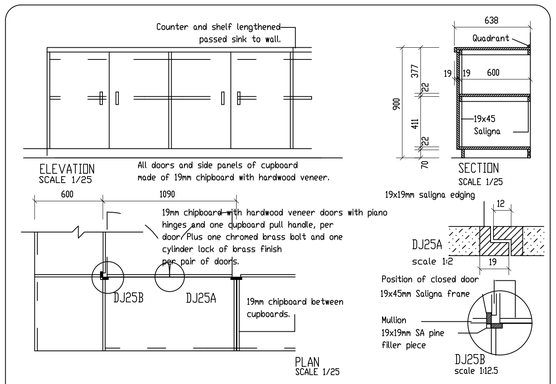

DETAIL NO:	SCALE:	DETAIL DESCRIPTION:
PART DETAIL S	AS SHOWN	CUPBOARD DETAIL

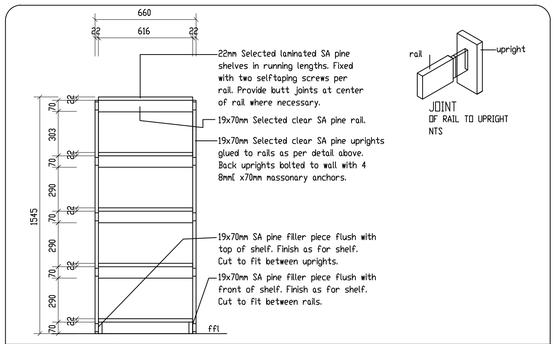

DETAIL NO:	SCALE:	DETAIL DESCRIPTION:
DETAIL K	1/20	DETAIL SECTION THROUGH ISLAND SHELVES

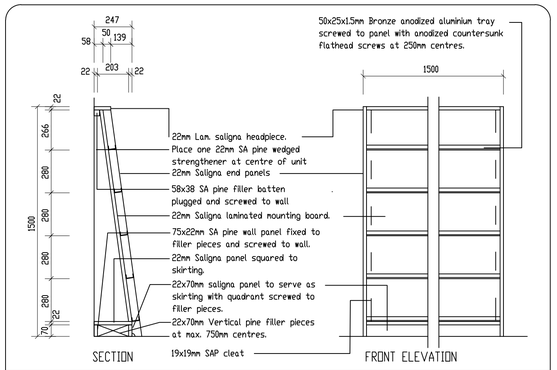

DETAIL NO:	SCALE:	DETAIL DESCRIPTION:
DETAIL L	1/20	DETAIL OF MAGAZINE STAND

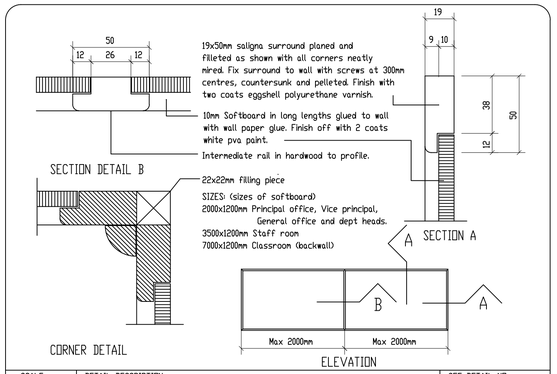

SCALE:	DETAIL DESCRIPTION:	SEE DETAIL NO:
1/2	DETAIL OF PINBOARD	ALL FLOOR PLANS

FOR TENDER "ONLY"

REVISIONS

	DATE	DESCRIPTION
0A	30 AUG. 22	ISSUED FOR TENDER

CLIENT:

education
Department:
Education
PROVINCE OF KWAZULU-NATAL

Head Office, 247 Burger Street, Pietermaritzburg, 3200
Telephone Number: (033) 392 1203
Fax number: (033) 392 1203

IMPLEMENTING AGENT:

DBSA

Headway Hill, 1258 Lever Road, Midrand, South Africa
Telephone Number: +27 11 313 3911
Fax number: +27 11 313 3500 or +27 11 313 3297
Web: webmaster@dbsa.org

PRINCIPAL AGENT:

Bhadama Properties & Projects

Regus Westway, -3 Floor,
18 The Boulevard, Westway Office Park
Tel +27 31 003 3138
Fax +27 31 003 3101
Email - nothile@bhadama.co.za/ sbu@bhadama.co.za

PROJECT NAME & CLIENT INFORMATION

KZN-DOE/DBSA - STORM DAMAGE PROGRAMME

SECTION / BLOCK

EZAKHELENI PS- BLOCK B MEDIA CENTER

TITLE

DETAILS

DRAWING DESCRIPTION

LIBRARY JOINERY DETAILS.

SCALE	AS SHOWN		
DESIGNED NM	DATE AUG. 2022	PrEng No.	SIGN.:
DRAWN NM	DATE AUG. 2022	SACAP NO.	SIGN.:
APPROVED NM	DATE AUG. 2022	DRAWN: NM	SIGN.:

DRAWING NUMBER: KZN.DoE/ DBSA-BPP- EPS- B- D-008-0A

REVISION 0A

PREPARED BY:

K&. PROJECTS
ARCHITECTS | PROJECT MANAGERS

Unit. no. 27,
Pallana Velly, 01 Robertson Road, New Germany, 3610
cell: 062 1826 167 - Fax: 086 762 552
Email: nkululeko@kandzprojects.co.za